Work Order ID 61830

Tuesday, September 07, 2010 3:15:03 PM

Item ID: D3535-23 **Accept** **Setup Start** **Stop**

Revision ID:

Item Name: Wearshoe

Start Date: 9/7/2010 **Start Qty:** 8.00 **Cust Item ID:**

Required Date: 9/13/2010 **Req'd Qty:** 8.00 **Customer:**

Reference:

Approvals: **Process Plan:** BL **Date:** 10-9-08 **Tooling:** _____ **Date:** _____ **Run Start** **Stop**

QC: _____ **Date:** _____ **SPC (Y/N):** _____ **Date:** _____

Sequence ID/ Work Center ID	Operation Description	Set Up/ Run Hours	Tool ID	Tool #	Plan Code	Accept Qty	Reject Qty	Reject Number	Insp. Stamp
Draw Nbr / **Revision Nbr**									
D3535 / Rev B									
100	FLOW WATER JET	0.00							
Waterjet	**Memo**	0.00				HB 10-9-15			
FLOW CNC Waterjet	1-Cut as per Dwg D3535 ☐Dwg Rev: B ☐Prog Rev: B ☐2-								
304.040	Deburr if necessary								
110	QC2- Inspect parts off machine FAI/FAIB	0.00							
QC	**Memo**	0.00				HB 10-9-15			
Quality Control									
120	QC8- Inspect parts - second check	0.00							
QC	**Memo**	0.00				YKZ			
Quality Control									

10/09/15

Dart Aerospace Ltd

W/O:		WORK ORDER CHANGES					
DATE	STEP	PROCEDURE CHANGE	By	Date	Qty	Approval Chief Eng / Prod Mgr	Approval QC Inspector

Part No: _____ **PAR #:** _____ **Fault Category:** _____ **NCR:** Yes No **DQA:** _____ **Date:** _____

Resolution: _____ **Disposition:** _____ **QA: N/C Closed:** _____ **Date:** _____

NCR:		WORK ORDER NON-CONFORMANCE (NCR)						
DATE	STEP	Description of NC Section A	Corrective Action Section B			Verification Section C	Approval Chief Eng	Approval QC Inspector
			Initial Chief Eng	Action Description Chief Eng	Sign & Date			

NOTE: Date & initial all entries

H:\fFORMS\Quality Assurance\approved QA\NCRWO RevE

Work Order ID 61830

Tuesday, September 07, 2010 3:15:03 PM

Item ID: D3535-23 **Accept** **Setup Start**

Revision ID: **Stop**

Item Name: Wearshoe

Start Date: 9/7/2010 **Start Qty:** 8.00 **Cust Item ID:**

Required Date: 9/13/2010 **Req'd Qty:** 8.00 **Customer:**

Reference:

Run Start

Approvals: **Process Plan:** _____ **Date:** _____ **Tooling:** _____ **Date:** _____

Stop

QC: _____ **Date:** _____ **SPC (Y/N):** _____ **Date:** _____

Sequence ID/ Work Center ID	Operation Description	Set Up/ Run Hours	Tool ID	Tool #	Plan Code	Accept Qty	Reject Qty	Reject Number	Insp. Stamp
130	NC BRAKE	0.00				12			
Brake NC	**Memo**	0.00							
Brake NC	1-Form on Brake as per Dwg D3535 using Jigs DT8261and DT8326□2-Form joggle as per Dwg D3535 using Jig DT8158□3-Identify as D3535-23 SA 10/09/16								
140	QC5- Inspect part completeness to step on W/O	0.00							
QC	**Memo**	0.00 10/09/16				X12			
Quality Control									
150	Grey Sandtex(Ref:4.3,5,6),per QSI005 4.3 M112588	0.00 BK 10-9-20				12			
Powdercoat	**Memo**	0.00							
Powder Coating	START TIME: 12:00 □OVEN TEMPERATURE: 320° □FINISH TIME: 1:30								

Dart Aerospace Ltd

W/O:		WORK ORDER CHANGES					
DATE	STEP	PROCEDURE CHANGE	By	Date	Qty	Approval Chief Eng / Prod Mgr	Approval QC Inspector

Part No: _____ **PAR #:** _____ **Fault Category:** _____ **NCR:** Yes No **DQA:** _____ **Date:** _____

Resolution: _____ **Disposition:** _____ **QA: N/C Closed:** _____ **Date:** _____

NCR:		WORK ORDER NON-CONFORMANCE (NCR)						
DATE	STEP	Description of NC Section A	Corrective Action Section B			Verification Section C	Approval Chief Eng	Approval QC Inspector
			Initial Chief Eng	Action Description Chief Eng	Sign & Date			

NOTE: Date & initial all entries

H:\fFORMS\Quality Assurance\approved QA\NCRWO RevE

Work Order ID 61830

Tuesday, September 07, 2010 3:15:03 PM

Item ID: D3535-23 **Accept** **Setup Start** **Stop**

Revision ID:

Item Name: Wearshoe

Start Date: 9/7/2010 **Start Qty:** 8.00 **Cust Item ID:**

Required Date: 9/13/2010 **Req'd Qty:** 8.00 **Customer:**

Reference:

Run Start **Stop**

Approvals: **Process Plan:** _____ **Date:** _____ **Tooling:** _____ **Date:** _____

QC: _____ **Date:** _____ **SPC (Y/N):** _____ **Date:** _____

Sequence ID/ Work Center ID	Operation Description	Set Up/ Run Hours	Tool ID	Tool #	Plan Code	Accept Qty	Reject Qty	Reject Number	Insp. Stamp
160	QC3- Inspect Part Finish	0.00							
QC	Memo	0.00	7/11 10/09/21			12	ø		
Quality Control									
170	Identify as per dwg & Stock Location: FP-21	0.00	BK 10-9-21						
Packaging	Memo	0.00				12			
Packaging									
180	QC21- Final Inspection - Work Order Release	0.00						10/09/21	
QC	Memo	0.00							
Quality Control									

VNF 10-9-21

Dart Aerospace Ltd

W/O:		WORK ORDER CHANGES					
DATE	STEP	PROCEDURE CHANGE	By	Date	Qty	Approval Chief Eng / Prod Mgr	Approval QC Inspector

Part No: _____ PAR #: _____ Fault Category: _____ NCR: Yes No DQA: _____ Date: _____

Resolution: _____ Disposition: _____ QA: N/C Closed: _____ Date: _____

NCR:		WORK ORDER NON-CONFORMANCE (NCR)						
DATE	STEP	Description of NC Section A	Corrective Action Section B			Verification Section C	Approval Chief Eng	Approval QC Inspector
			Initial Chief Eng	Action Description Chief Eng	Sign & Date			

NOTE: Date & initial all entries

H:\fFORMS\Quality Assurance\approved QA\NCRWO RevE

Picklist Print

Tuesday, September 07, 2010 3:15:08 PM

Work Order ID: 61830

Parent Item: D3535-23

Parent Item Name: Wearshoe

Start Date: 9/7/2010 **Required Date:** 9/13/2010

Start Qty: 8.00 **Required Qty:** 8.00

Comments: IPP Rev:A New Issue 07-02-15 JLM
IPP Rev:B As per Rev B 07-08-31 JLM Verified By:EC

Component Item ID/ Item Name	Replacement Item ID	Mfg/ Purch	Bin Item	Primary Location	Last Location	Route Seq ID	Unit of Measure	Qty on Hand	Qty per Kit	Total Qty	Qty Issued	Date Issued	Status
M304S20GA 304/316 .040 Sheet		Purchased	No			100	sf	102.7987	1.3615	11.46526 JB 10-9-15			

Location		Loc Qty	Loc Code
MAT		16.1522	
	114574	16.1522	
MAT20		86.6465	
	112885	2.7475	
	113062	0.699	
	115440	83.2	115440

Dart Aerospace Ltd

W/O:		WORK ORDER CHANGES					
DATE	STEP	PROCEDURE CHANGE	By	Date	Qty	Approval Chief Eng / Prod Mgr	Approval QC Inspector

Part No: _____ PAR #: _____ Fault Category: _____ NCR: Yes No DQA: _____ Date: _____

Resolution: _____ Disposition: _____ QA: N/C Closed: _____ Date: _____

NCR:		WORK ORDER NON-CONFORMANCE (NCR)						
DATE	STEP	Description of NC Section A	Corrective Action Section B			Verification Section C	Approval Chief Eng	Approval QC Inspector
			Initial Chief Eng	Action Description Chief Eng	Sign & Date			

NOTE: Date & initial all entries

H:\fFORMS\Quality Assurance\approved QA\NCRWO RevE

DART AEROSPACE LTD	Work Order:	11830
Description: Wearshoe	**Part Number:**	D3535-23
Inspection Dwg: D3535 **Rev:** B		Page 1 of 1

FIRST ARTICLE INSPECTION CHECKLIST

[X] First Article [ ] Prototype

Drawing Dimension	Tolerance	Actual Dimension	Accept	Reject	Method of Inspection	Comments
1.885	+/-0.010	1.889	✓		V 1B 02	
2.000	+/-0.010	2.000	✓		V	
4.750	+/-0.010	4.750	✓		T	
9.500	+/-0.010	9.500	✓		T	
14.250	+/-0.010	14.250	✓		T	
17.750	+/-0.010	17.750	✓		T	
23.140	+/-0.010	23.140	✓		T	
28.530	+/-0.010	28.530	✓		T	
33.920	+/-0.010	33.920	✓		T	
39.310	+/-0.010	39.310	✓		T	
44.700	+/-0.010	44.700	✓		T	
48.200	+/-0.010	48.200	✓		T	
52.850	+/-0.010	52.850	✓		T	
Ø0.188	+0.005/-0.001	.189	✓		V	
48.00	+/-0.030	48.00	✓		T	
39.00	+/-0.030	39.00	✓		T	
32.00	+/-0.030	32.00	✓		T	
24.00	+/-0.030	24.00	✓		T	
16.00	+/-0.030	16.00	✓		T	
8.00	+/-0.030	8.00	✓		T	
6.00	+/-0.030	6.00	✓		T	
0.300	+/-0.010	.304	✓		V	
0.300	+/-0.010	.302	✓		V	
0.038	+/-0.010	.036	✓		V	

Measured by:	JB	**Audited by:**	[illegible]	**Prototype Approval:**	N/A
Date:	10-9-15	**Date:**	10/07/15	**Date:**	N/A

Rev	Date	Change	Revised by	Approved
A	07.11.23	New Issue	KJ/EC/DD	[illegible]

Dart Aerospace Ltd

W/O:		WORK ORDER CHANGES					
DATE	STEP	PROCEDURE CHANGE	By	Date	Qty	Approval Chief Eng / Prod Mgr	Approval QC Inspector

Part No: _____ **PAR #:** _____ **Fault Category:** _____ **NCR:** Yes No **DQA:** _____ **Date:** _____

Resolution: _____ **Disposition:** _____ **QA: N/C Closed:** _____ **Date:** _____

NCR:		WORK ORDER NON-CONFORMANCE (NCR)						
DATE	STEP	Description of NC Section A	Corrective Action Section B			Verification Section C	Approval Chief Eng	Approval QC Inspector
			Initial Chief Eng	Action Description Chief Eng	Sign & Date			

NOTE: Date & initial all entries

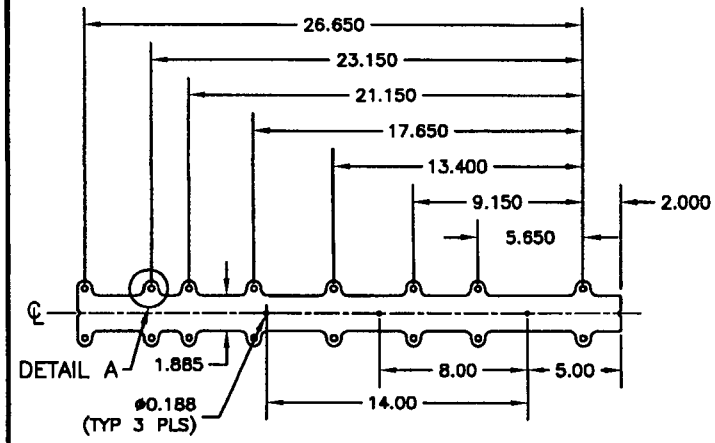

D3535-11F FLAT PATTERN

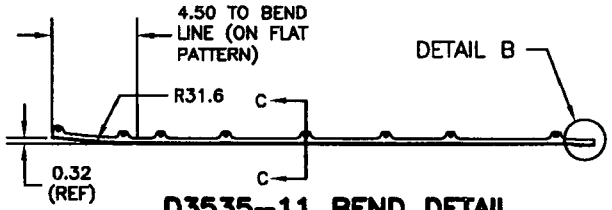

D3535-11 BEND DETAIL

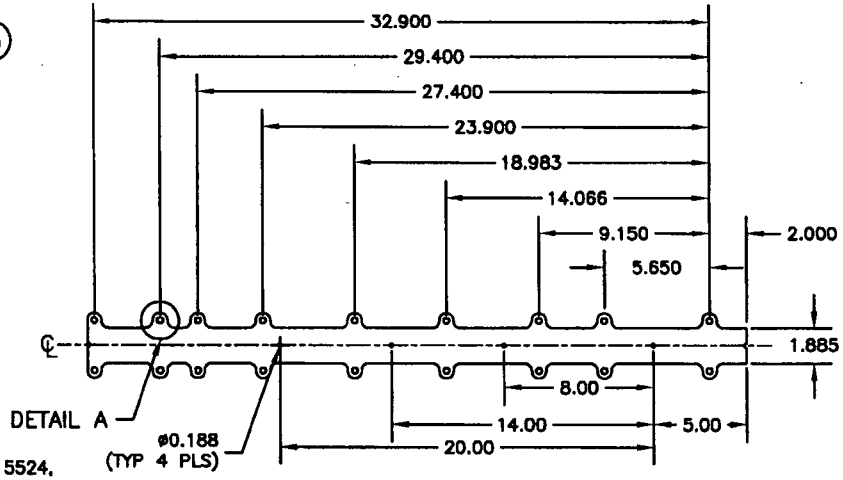

D3535-13F FLAT PATTERN

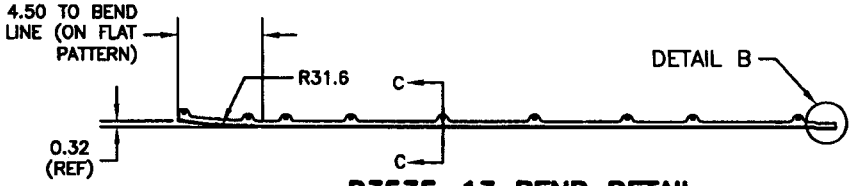

D3535-13 BEND DETAIL

NOTES

1) MATERIAL: AISI 304/316 SS SHEET PER AMS 5513 OR AMS 5524, 20 GAUGE (0.038 THICK) (REF DART SPEC M304S20GA)
2) FINISH: POWDER COAT GREY SANDTEX (4.3.5.6) PER QSI 005 4.3
3) PART IS SYMMETRICAL ABOUT ℄
4) TOLERANCES ARE PER DART QSI 018 UNLESS OTHERWISE NOTED
5) ALL DIMENSIONS ARE IN INCHES
6) BREAK ALL SHARP EDGES TO 0.010 MAX
7) IDENTIFY WITH DART P/N USING WHITE FINE POINT PAINT MARKER
8) SEE PAGE 7 FOR DETAILS AND SECTION

RELEASED 07.04.24

REV	DATE	DESCRIPTION
A	06.10.25	NEW ISSUE
B	07.04.17	MOVE TAB OUTBOARD, ADD AMS SPEC

DART

DESIGN: CB | DRAWN BY: PH | CHECKED | APPROVED | DATE: 07.04.17

DART AEROSPACE USA, INC.
PORT HADLOCK, WA

DRAWING NO. D3535 | REV. B | SHEET 1 OF 7

TITLE: WEARSHOE | SCALE: 1:10

Dart Aerospace Ltd

W/O:		WORK ORDER CHANGES					
DATE	STEP	PROCEDURE CHANGE	By	Date	Qty	Approval Chief Eng / Prod Mgr	Approval QC Inspector

Part No: _____ **PAR #:** _____ **Fault Category:** _____ **NCR:** Yes No **DQA:** _____ **Date:** _____

Resolution: _____ **Disposition:** _____ **QA: N/C Closed:** _____ **Date:** _____

NCR:		WORK ORDER NON-CONFORMANCE (NCR)						
DATE	STEP	Description of NC Section A	Corrective Action Section B			Verification Section C	Approval Chief Eng	Approval QC Inspector
			Initial Chief Eng	Action Description Chief Eng	Sign & Date			

NOTE: Date & initial all entries

H:\fFORMS\Quality Assurance\approved QA\NCRWO RevE

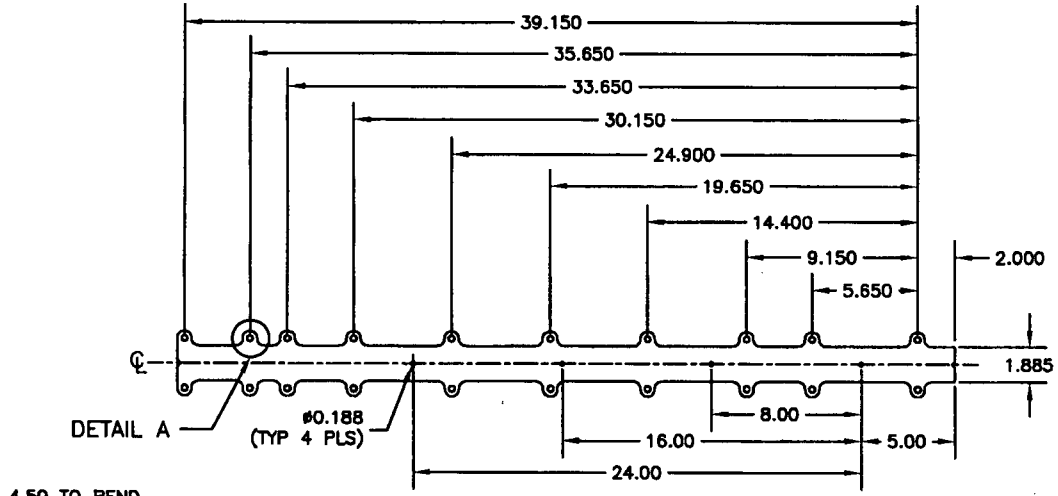

D3535-15F FLAT PATTERN

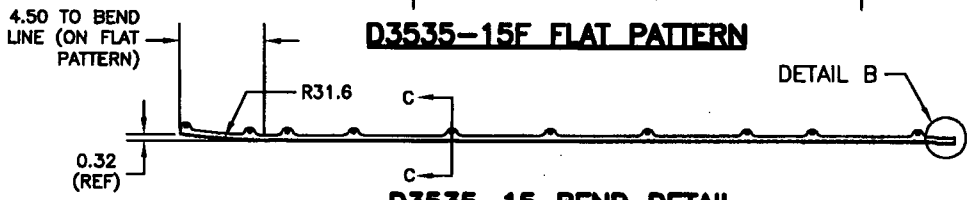

D3535-15 BEND DETAIL

RELEASED
07.04.24

w/o G1830

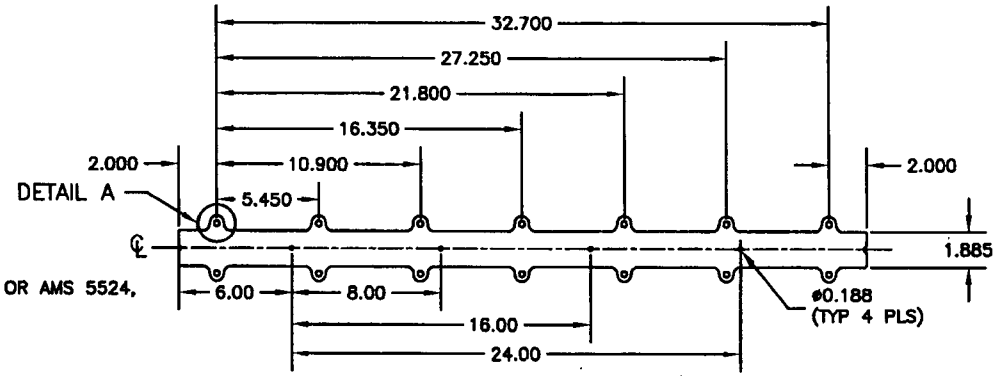

D3535-21F FLAT PATTERN

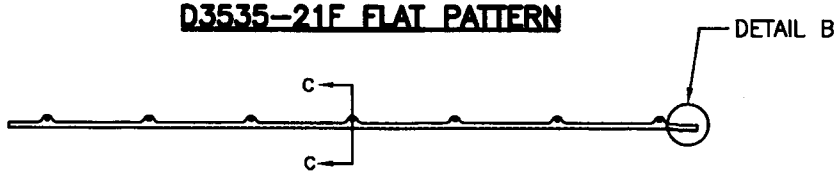

D3535-21 BEND DETAIL

NOTES

1) MATERIAL: AISI 304/316 SS SHEET PER AMS 5513 OR AMS 5524, 20 GAUGE (0.038 THICK) (REF DART SPEC M304S20GA)
2) FINISH: POWDER COAT GREY SANDTEX (4.3.5.6) PER QSI 005 4.3
3) PART IS SYMMETRICAL ABOUT ℄
4) TOLERANCES ARE PER DART QSI 018 UNLESS OTHERWISE NOTED
5) ALL DIMENSIONS ARE IN INCHES
6) BREAK ALL SHARP EDGES TO 0.010 MAX
7) IDENTIFY WITH DART P/N USING WHITE FINE POINT PAINT MARKER
8) SEE PAGE 7 FOR DETAILS AND SECTION

DESIGN C.B	DRAWN BY AH	DART AEROSPACE USA, INC. PORT HADLOCK, WA	
CHECKED	APPROVED	DRAWING NO. D3535	REV. B
DATE 07.04.17		TITLE WEARSHOE	SHEET 2 OF 7
			SCALE 1:10

Dart Aerospace Ltd

W/O:		WORK ORDER CHANGES					
DATE	STEP	PROCEDURE CHANGE	By	Date	Qty	Approval Chief Eng / Prod Mgr	Approval QC Inspector

Part No: _____ **PAR #:** _____ **Fault Category:** _____ **NCR:** Yes No **DQA:** _____ **Date:** _____

Resolution: _____ **Disposition:** _____ **QA: N/C Closed:** _____ **Date:** _____

NCR:		WORK ORDER NON-CONFORMANCE (NCR)						
DATE	STEP	Description of NC Section A	Corrective Action Section B			Verification Section C	Approval Chief Eng	Approval QC Inspector
			Initial Chief Eng	Action Description Chief Eng	Sign & Date			

NOTE: Date & initial all entries

H:\fFORMS\Quality Assurance\approved QA\NCRWO RevE

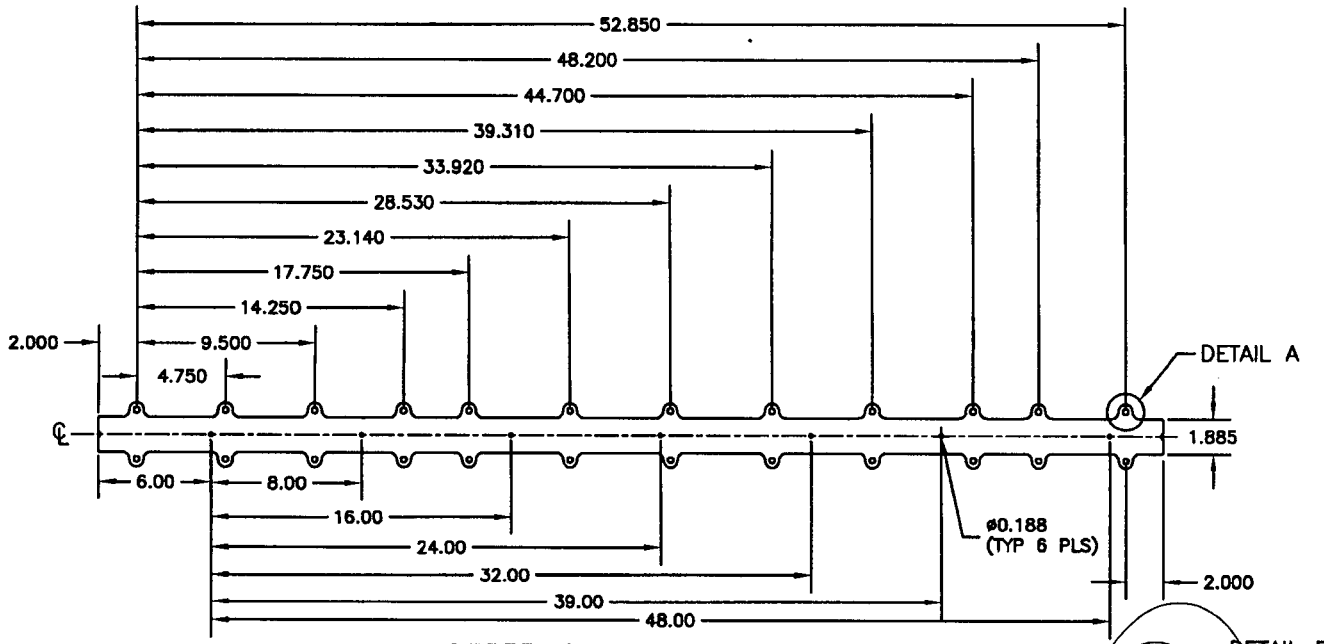

D3535-23F FLAT PATTERN

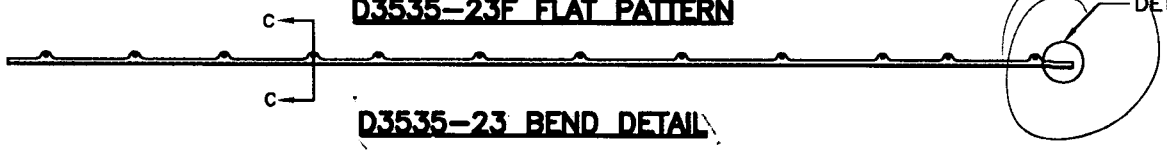

D3535-23 BEND DETAIL

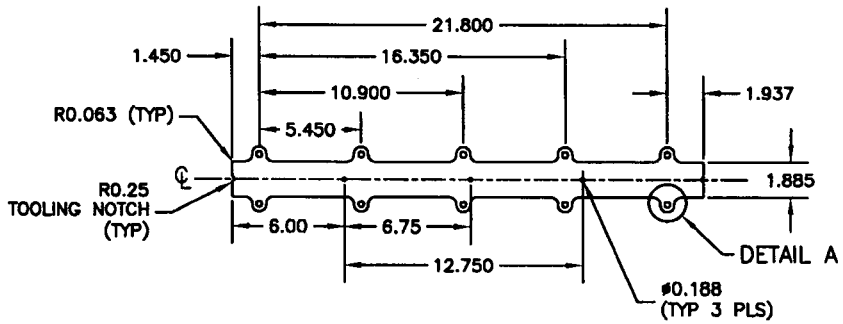

D3535-25F FLAT PATTERN

D3535-25 BEND DETAIL

NOTES

1) MATERIAL: AISI 304/316 SS SHEET PER AMS 5513 OR AMS 5524, 20 GAUGE (0.038 THICK) (REF DART SPEC M304S20GA)
2) FINISH: POWDER COAT GREY SANDTEX (4.3.5.6) PER QSI 005 4.3
3) PART IS SYMMETRICAL ABOUT ℄
4) TOLERANCES ARE PER DART QSI 018 UNLESS OTHERWISE NOTED
5) ALL DIMENSIONS ARE IN INCHES
6) BREAK ALL SHARP EDGES TO 0.010 MAX
7) IDENTIFY WITH DART P/N USING WHITE FINE POINT PAINT MARKER
8) SEE PAGE 7 FOR DETAILS AND SECTION

RELEASED 07.04.24

wb 61838

DESIGN CB	DRAWN BY AH	DART AEROSPACE USA, INC. PORT HADLOCK, WA	
CHECKED	APPROVED	DRAWING NO. D3535	REV. B
DATE 07.04.17		TITLE WEARSHOE	SHEET 3 OF 7
			SCALE 1:10

Dart Aerospace Ltd

W/O:		WORK ORDER CHANGES					
DATE	STEP	PROCEDURE CHANGE	By	Date	Qty	Approval Chief Eng / Prod Mgr	Approval QC Inspector

Part No: _____ **PAR #:** _____ **Fault Category:** _____ **NCR:** Yes No **DQA:** _____ **Date:** _____

Resolution: _____ **Disposition:** _____ **QA: N/C Closed:** _____ **Date:** _____

NCR:		WORK ORDER NON-CONFORMANCE (NCR)						
DATE	STEP	Description of NC Section A	Corrective Action Section B			Verification Section C	Approval Chief Eng	Approval QC Inspector
			Initial Chief Eng	Action Description Chief Eng	Sign & Date			

NOTE: Date & initial all entries

H:\fFORMS\Quality Assurance\approved QA\NCRWO RevE

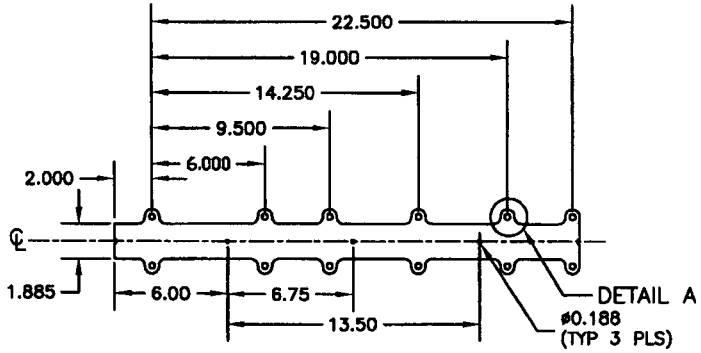

D3535-31F FLAT PATTERN

D3535-31 BEND DETAIL

RELEASED
07.04.24

W/O 91830

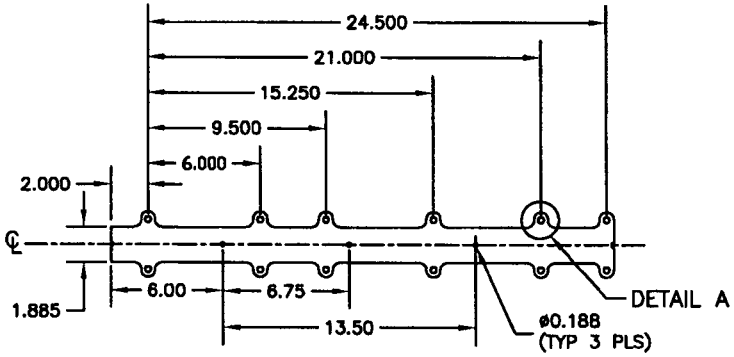

D3535-33F FLAT PATTERN

D3535-33 BEND DETAIL

NOTES

1) MATERIAL: AISI 304/316 SS SHEET PER AMS 5513 OR AMS 5524, 20 GAUGE (0.038 THICK) (REF DART SPEC M304S20GA)
2) FINISH: POWDER COAT GREY SANDTEX (4.3.5.6) PER QSI 005 4.3
3) PART IS SYMMETRICAL ABOUT ℄
4) TOLERANCES ARE PER DART QSI 018 UNLESS OTHERWISE NOTED
5) ALL DIMENSIONS ARE IN INCHES
6) BREAK ALL SHARP EDGES TO 0.010 MAX
7) IDENTIFY WITH DART P/N USING WHITE FINE POINT PAINT MARKER
8) SEE PAGE 7 FOR DETAILS AND SECTION

DESIGN CB	DRAWN BY PH	DART AEROSPACE USA, INC. PORT HADLOCK, WA	
CHECKED	APPROVED	DRAWING NO. D3535	REV. B
DATE 07.04.17		TITLE WEARSHOE	SHEET 4 OF 7
			SCALE 1:10

Dart Aerospace Ltd

W/O:		WORK ORDER CHANGES					
DATE	STEP	PROCEDURE CHANGE	By	Date	Qty	Approval Chief Eng / Prod Mgr	Approval QC Inspector

Part No: _____ PAR #: _____ Fault Category: _____ NCR: Yes No DQA: _____ Date: _____

Resolution: _____ Disposition: _____ QA: N/C Closed: _____ Date: _____

NCR:		WORK ORDER NON-CONFORMANCE (NCR)						
DATE	STEP	Description of NC Section A	Corrective Action Section B			Verification Section C	Approval Chief Eng	Approval QC Inspector
			Initial Chief Eng	Action Description Chief Eng	Sign & Date			

NOTE: Date & initial all entries

H:\fFORMS\Quality Assurance\approved QA\NCRWO RevE

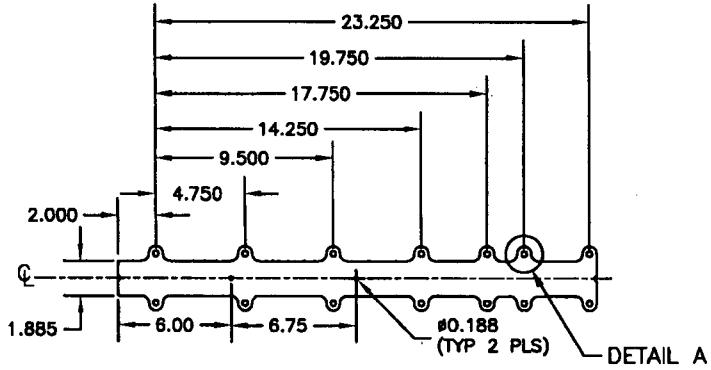

D3535-35F FLAT PATTERN

D3535-35 BEND DETAIL

RELEASED
07.04.24

w/o 41830

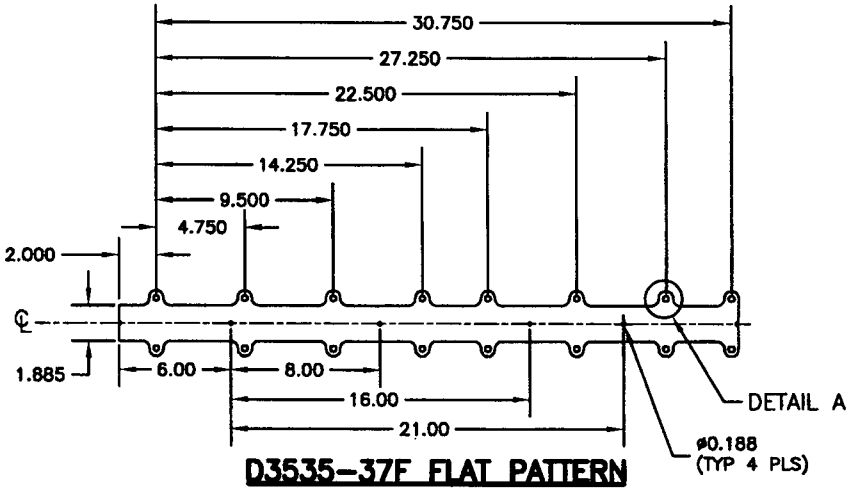

D3535-37F FLAT PATTERN

D3535-37 BEND DETAIL

NOTES

1) MATERIAL: AISI 304/316 SS SHEET PER AMS 5513 OR AMS 5524, 20 GAUGE (0.038 THICK) (REF DART SPEC M304S20GA)
2) FINISH: POWDER COAT GREY SANDTEX (4.3.5.6) PER QSI 005 4.3
3) PART IS SYMMETRICAL ABOUT ℄
4) TOLERANCES ARE PER DART QSI 018 UNLESS OTHERWISE NOTED
5) ALL DIMENSIONS ARE IN INCHES
6) BREAK ALL SHARP EDGES TO 0.010 MAX
7) IDENTIFY WITH DART P/N USING WHITE FINE POINT PAINT MARKER
8) SEE PAGE 7 FOR DETAILS AND SECTION

DESIGN C.B	DRAWN BY	DART AEROSPACE USA, INC. PORT HADLOCK, WA	
CHECKED	APPROVED	DRAWING NO. D3535	REV. B
DATE 07.04.17		TITLE WEARSHOE	SHEET 5 OF 7
			SCALE 1:10

Dart Aerospace Ltd

W/O:		WORK ORDER CHANGES					
DATE	STEP	PROCEDURE CHANGE	By	Date	Qty	Approval Chief Eng / Prod Mgr	Approval QC Inspector

Part No: _____ **PAR #:** _____ **Fault Category:** _____ **NCR:** Yes No **DQA:** _____ **Date:** _____

Resolution: _____ **Disposition:** _____ **QA: N/C Closed:** _____ **Date:** _____

NCR:		WORK ORDER NON-CONFORMANCE (NCR)						
DATE	STEP	Description of NC Section A	Corrective Action Section B			Verification Section C	Approval Chief Eng	Approval QC Inspector
			Initial Chief Eng	Action Description Chief Eng	Sign & Date			

NOTE: Date & initial all entries

H:\fFORMS\Quality Assurance\approved QA\NCRWO RevE

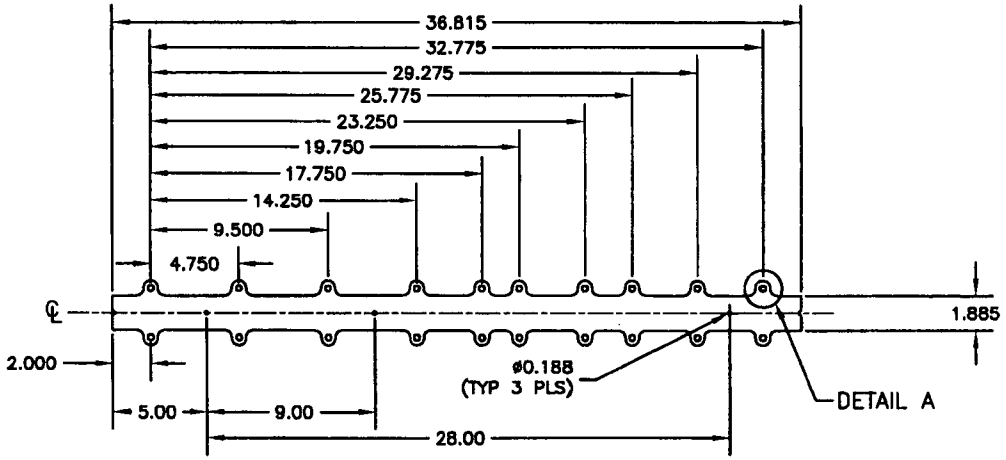

D3535-39F FLAT PATTERN

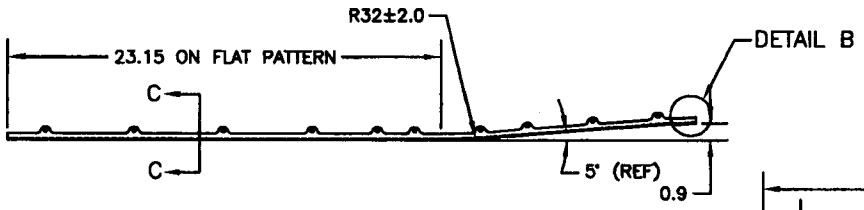

D3535-39 BEND DETAIL

w/o 41830

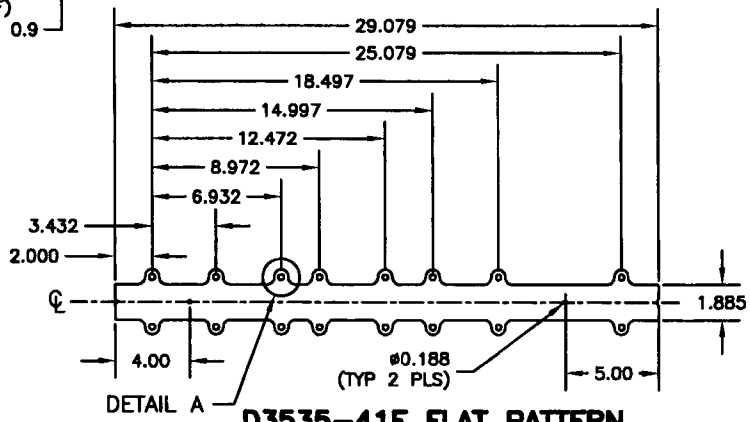

D3535-41F FLAT PATTERN

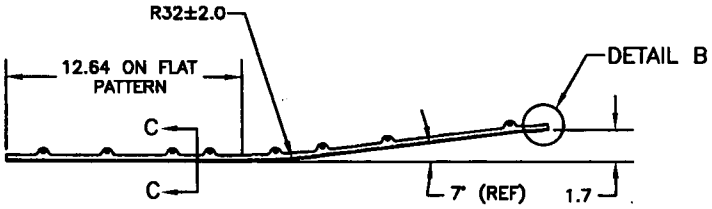

D3535-41 BEND DETAIL

NOTES

1) MATERIAL: AISI 304/316 SS SHEET PER AMS 5513 OR AMS 5524, 20 GAUGE (0.038 THICK) (REF DART SPEC M304S20GA)
2) FINISH: POWDER COAT GREY SANDTEX (4.3.5.6) PER QSI 005 4.3
3) PART IS SYMMETRICAL ABOUT ℄
4) TOLERANCES ARE PER DART QSI 018 UNLESS OTHERWISE NOTED
5) ALL DIMENSIONS ARE IN INCHES
6) BREAK ALL SHARP EDGES TO 0.010 MAX
7) IDENTIFY WITH DART P/N USING WHITE FINE POINT PAINT MARKER
8) SEE PAGE 7 FOR DETAILS AND SECTION

RELEASED
07.04.24

DART

DESIGN CB	DRAWN BY	DART AEROSPACE USA, INC. PORT HADLOCK, WA	
CHECKED	APPROVED	DRAWING NO. D3535	REV. B
DATE 07.04.17		TITLE WEARSHOE	SHEET 6 OF 7
			SCALE 1:10

Dart Aerospace Ltd

W/O:		WORK ORDER CHANGES					
DATE	STEP	PROCEDURE CHANGE	By	Date	Qty	Approval Chief Eng / Prod Mgr	Approval QC Inspector

Part No: _____ **PAR #:** _____ **Fault Category:** _____ **NCR:** Yes No **DQA:** _____ **Date:** _____

Resolution: _____ **Disposition:** _____ **QA: N/C Closed:** _____ **Date:** _____

NCR:		WORK ORDER NON-CONFORMANCE (NCR)						
DATE	STEP	Description of NC Section A	Corrective Action Section B			Verification Section C	Approval Chief Eng	Approval QC Inspector
			Initial Chief Eng	Action Description Chief Eng	Sign & Date			

NOTE: Date & initial all entries

H:\fFORMS\Quality Assurance\approved QA\NCRWO RevE

DESIGN	DRAWN BY	DART AEROSPACE USA, INC. PORT HADLOCK, WA	
CB	PH		
CHECKED	APPROVED	DRAWING NO. D3535	REV. B SHEET 7 OF 7
DATE 07.04.17		TITLE WEARSHOE	SCALE 1:1

RELEASED
07.04.24

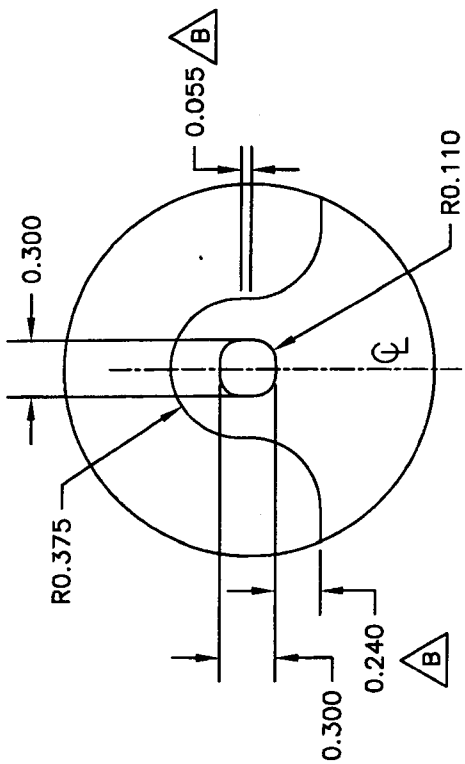

DETAIL A

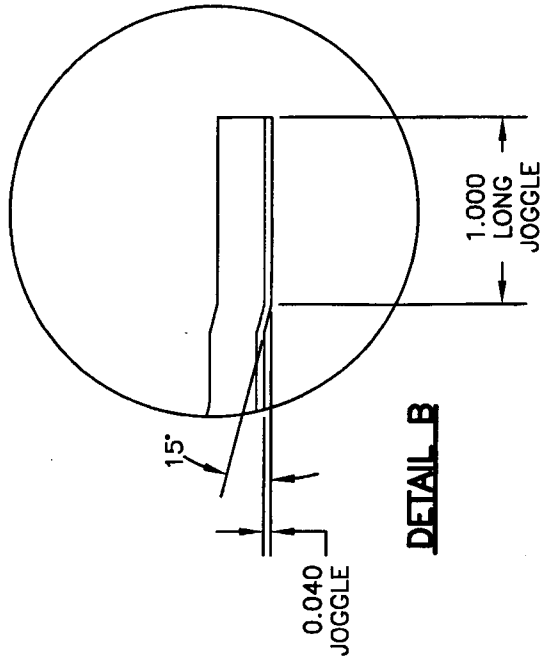

DETAIL B

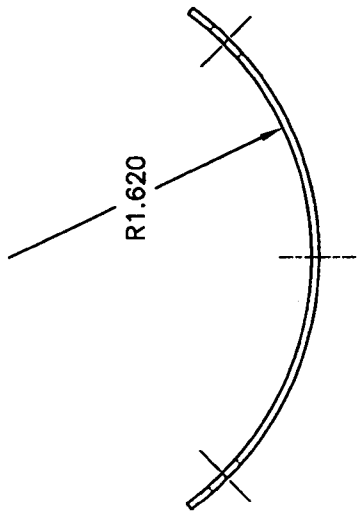

SECTION C–C

Dart Aerospace Ltd

W/O:		WORK ORDER CHANGES					
DATE	STEP	PROCEDURE CHANGE	By	Date	Qty	Approval Chief Eng / Prod Mgr	Approval QC Inspector

Part No: _____ **PAR #:** _____ **Fault Category:** _____ **NCR:** Yes No **DQA:** _____ **Date:** _____

Resolution: _____ **Disposition:** _____ **QA: N/C Closed:** _____ **Date:** _____

NCR:		WORK ORDER NON-CONFORMANCE (NCR)						
DATE	STEP	Description of NC Section A	Corrective Action Section B			Verification Section C	Approval Chief Eng	Approval QC Inspector
			Initial Chief Eng	Action Description Chief Eng	Sign & Date			

NOTE: Date & initial all entries

H:\fFORMS\Quality Assurance\approved QA\NCRWO RevE